GOES-R+ (R and S and T and U) X-Ray Sensor (XRS)

Frank Eparvier

EXIS Lead Scientist

Frank.eparvier@lasp.colorado.edu

(303) 492-4546

GOES-R+ EXIS: All 4 Flight Models Built

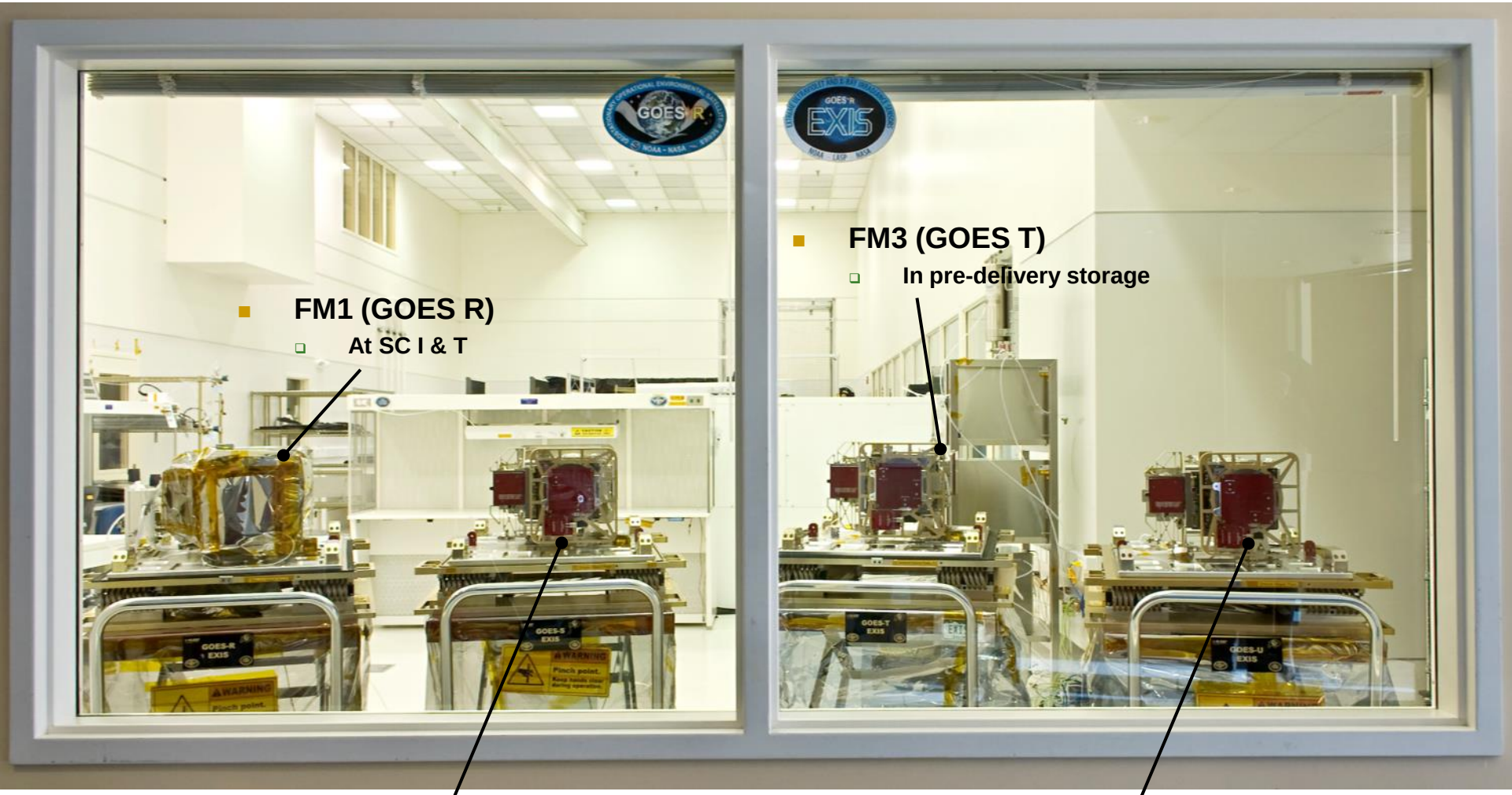

- **FM1 (GOES R)**
  - **At SC I & T**
- **FM3 (GOES T)**
  - **In pre-delivery storage**
- **FM2 (GOES S)**
  - **In pre-delivery storage (Delivery Summer 2015)**
- **FM4 (GOES U)**
  - **Just finished pre-environmental SURF calibration**

GOES-R+ EXIS (EUV and X-ray Irradiance Sensors)

- Formulation Phase: 2004-2006
- Implementation Phase Awarded: 2007
- Critical Design Review: 2009
- FM-1 (GOES-R) Delivered 2013

EXIS = EUV and X-ray Irradiance Sensors

The Key Components of EXIS:

- **EUVS = Extreme Ultraviolet Sensor**
- **XRS = X-Ray Sensor**
- **EXEB = EUVS/XRS Electrical Box**

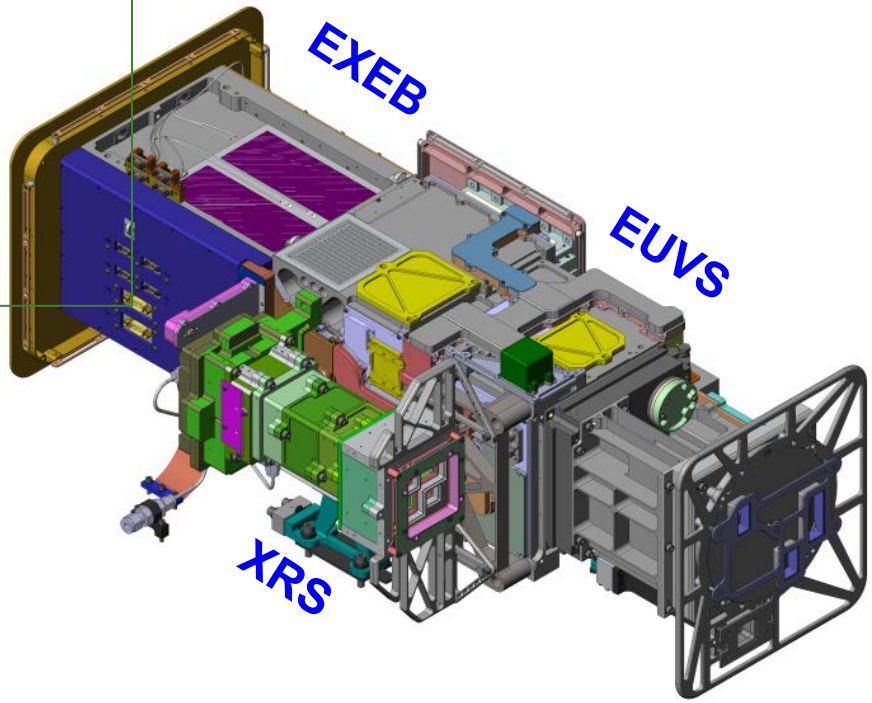

XRS Overview

- **XRS Purpose: Monitor solar flares (and help predict proton events) that can disrupt communications and degrade navigational accuracy**
- Requirements: measure 0.05-0.4 nm and 0.1-0.8 nm (matching previous bandpasses) with ≤3-second cadence
- Pre-GOES-R XRS: Ionization chamber instruments with limited dynamic range (solar min unresolved in noise and bright flares clipped)
- XRS for GOES-R+: Solid state detectors that capture full dynamic range of solar variability

X-Ray Sensor (XRS)

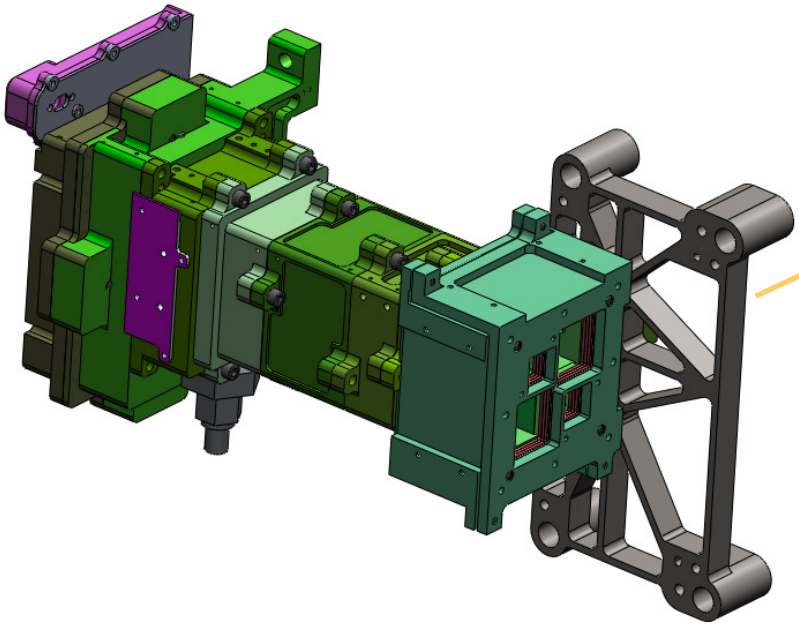

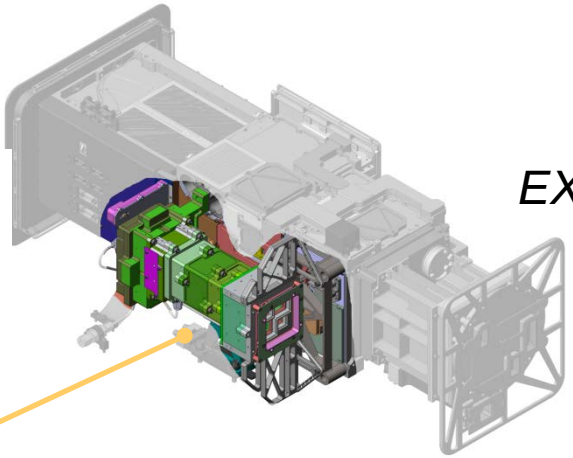

EXIS

Key components of XRS

- *Detector Channel A*
- *Detector Channel B*
- *Dark Detector Channel*
- *Magnet Assembly*

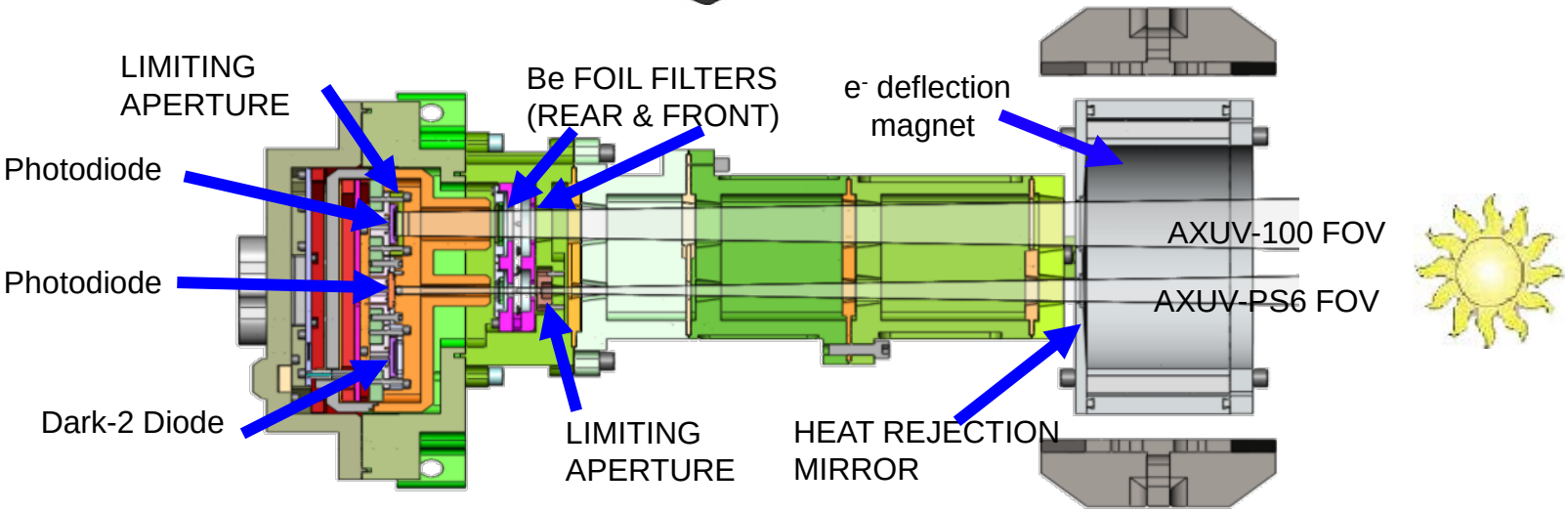

GOES-R XRS Overview

- **Each XRS channel (A & B) has:**
  - Two photometers with different sized apertures for solar minimum and solar maximum/flaring conditions *(Large overlap in both dynamic ranges adds **redundancy** in measurements)*
  - Silicon photodiodes with Be filters (thicknesses of filters and diodes scaled to match previous XRS bandpasses)
  - Low-power, low-noise electrometers
  - Measurement Cadence: 1-sec
- **XRS also has:**
  - Dark channel for simultaneous background corrections
  - Improved calibration methodology
  - Improved measurement to irradiance conversion

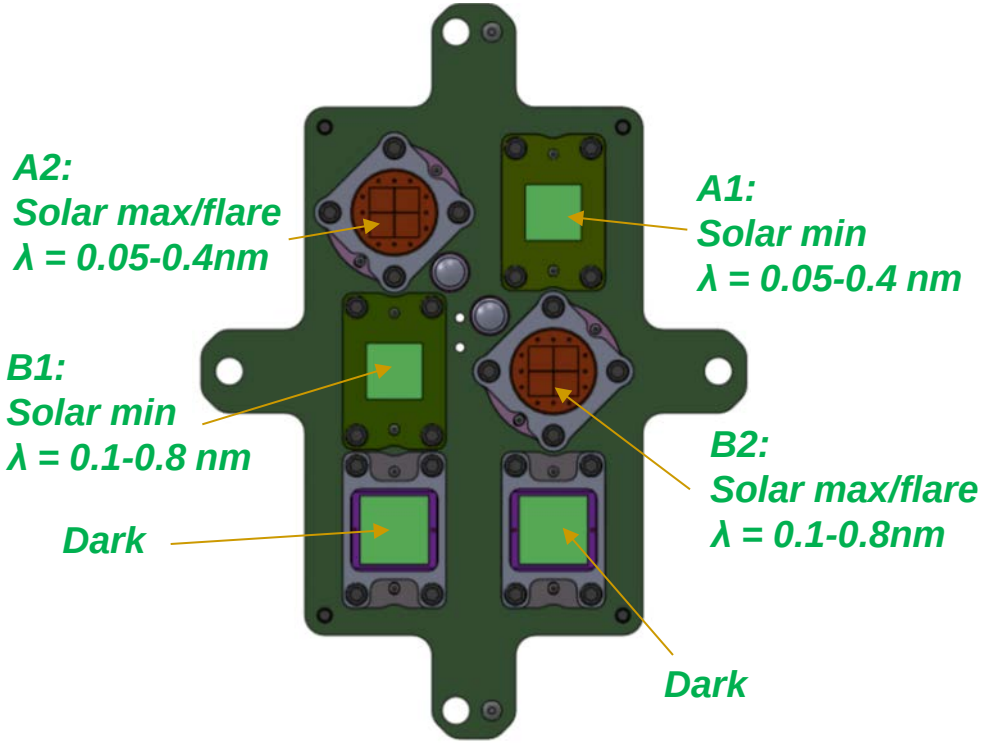

Flare Location with XRS:
XRS-A and XRS-B solar max detectors are quadrant photodiodes giving the location of bright X-Ray flares

XRS Wavelength Response

- The key desire is to have the new XRS-B respond similarly to the solar irradiance as historical XRS-B instruments.
- **GOES-R+ XRS won't have identical wavelength response as previous XRS's, but is carefully calibrated and flare magnitudes can be replicated.**

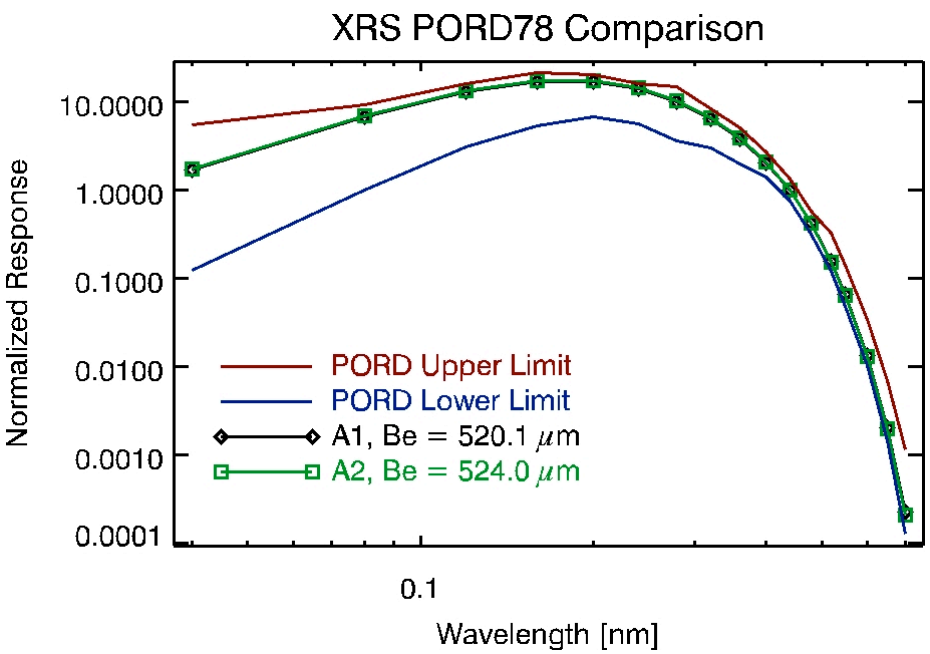

XRS A

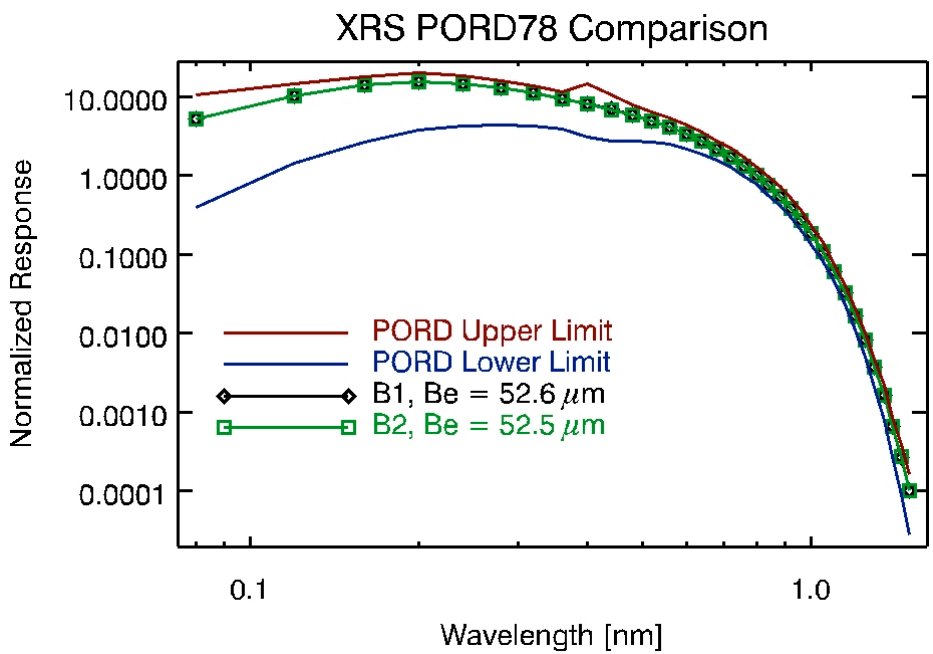

XRS B

XRS Dynamic Range

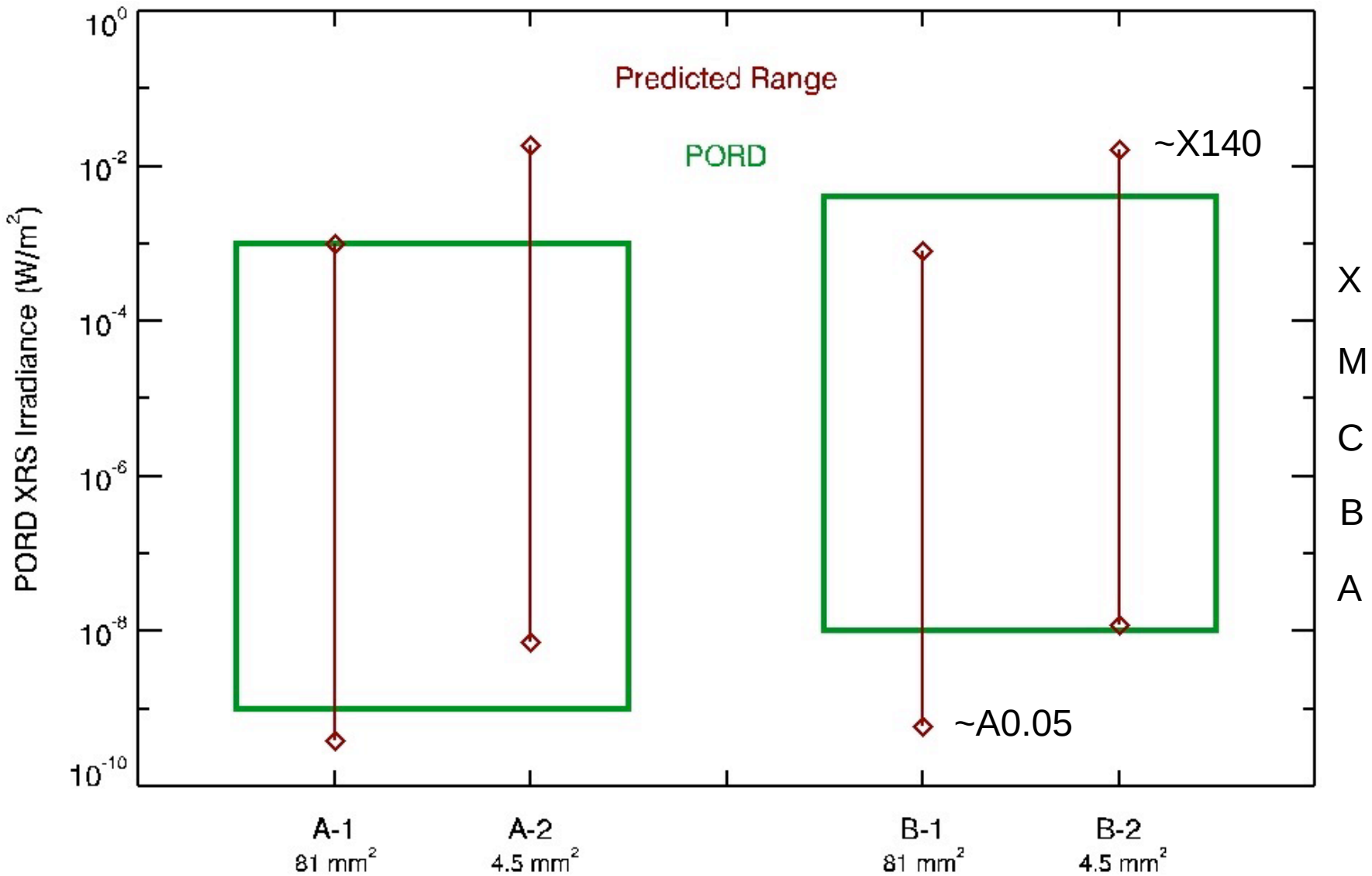

GOES-R+ XRS Summary

- New design using solid state detectors
- Covers dynamic range of ~A0.05 to X140 flares
- Measurement cadence of 1-sec (though L1b data product is 3-sec).
- End of Mission Accuracy of L1b product <10%
- Quad diodes allow for flare location (<1 arc-min for X1 flare)